Hanex® UK

Hanex Cast Basin Data Sheet

Model: VB5

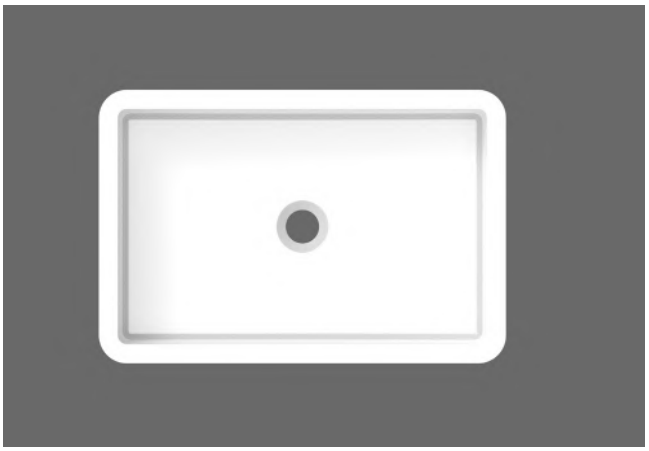

Available in N-White

Technical Detail

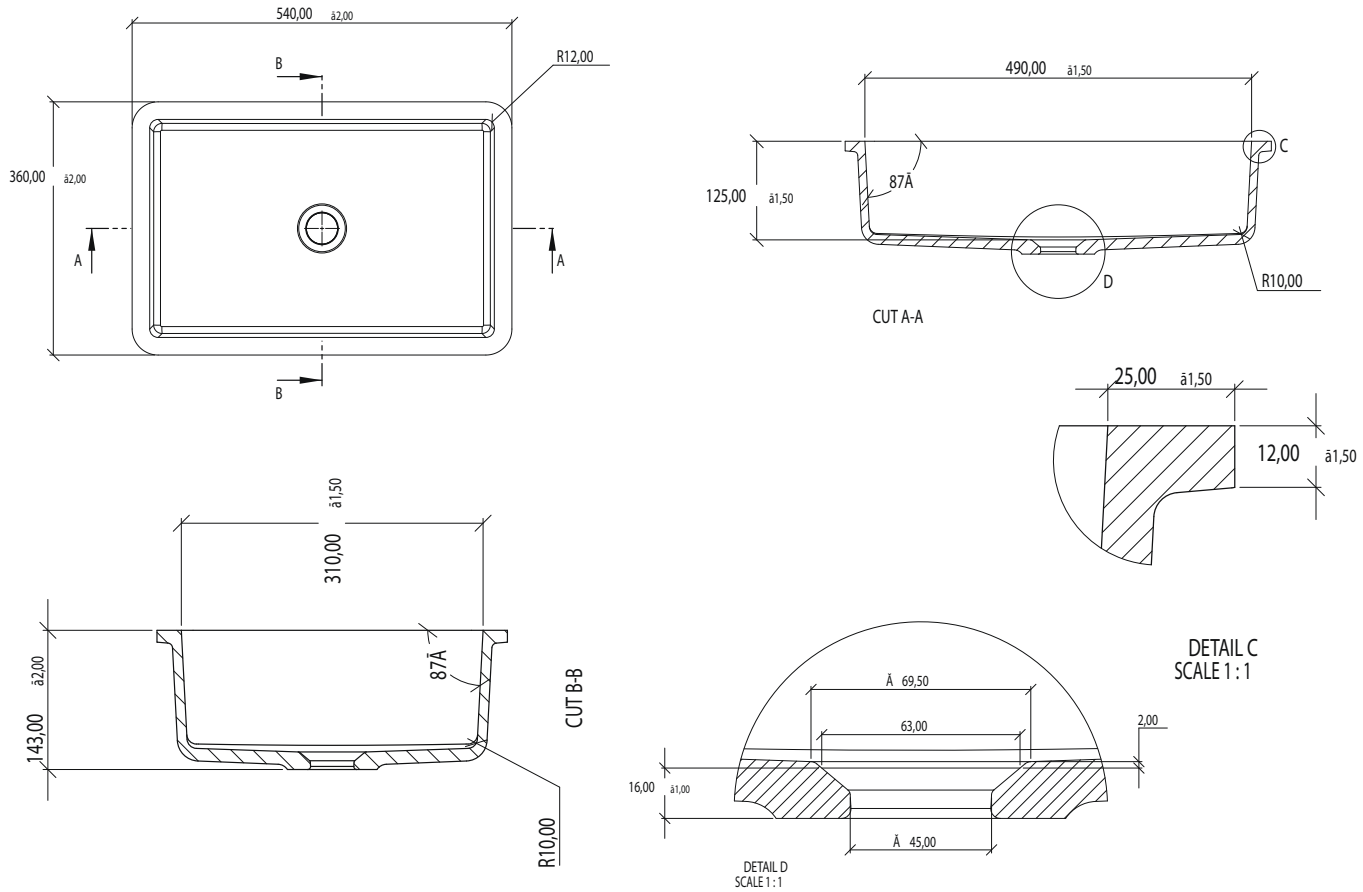

Hanex® UK

Hanex Cast Basin Data Sheet

Care and Maintenance

Every Day Cleaning

We recommend a damp microfibre cloth used with a standard household bathroom spray, such as “KOH” or “Method” should remove most stains.

Bleach Cleaning

First clean your sink as per the every day cleaning method. Then dilute bleach with water and spray on to your basin(if possible) If no spray bottle is availible then add water to your basin first, then a little bleach. Leave overnight if possible, or for a few hours (do not exceed 15 hours). Then rinse/ wipe with a damp cloth to remove bleach and this should refresh the look of your Hanex basin.